GRANT UK

COMPLETE PRODUCT GUIDE

HEAT PUMPS

OIL BOILERS

SOLAR THERMAL

CYLINDERS

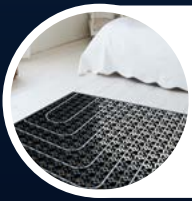

UNDERFLOOR HEATING

ALUMINIUM RADIATORS

2025

ISSUE ONE

CONTENTS

Oil Fired Boilers & Flues	**4–19**
Vortex Eco Range – utility & external (outdoor modules)	5–7
Vortex Pro Range – utility & external (outdoor modules)	8–10
Vortex Boiler House Range	11
Vortex Pro Range – combi models	12–13
EZ-Fit Flue systems	14–19
Air Source Heat Pumps	**20–28**
Aerona³ R32 air source heat pumps	20–25
Aerona 290 air source heat pumps	26–28
Hybrid Systems	**30–31**
VortexAir hybrid	30
EvoLink hybrid system hub	31
QR Cylinders	**32–38**
QR single coil cylinders	32
QR single coil slimline cylinders	32
QR single coil pre-plumbed cylinders	32
QR twin coil cylinders	33
QR single coil integrated cylinders	33
Solar Thermal Systems	**39–45**
On roof kits	41
In roof & flat roof kits	42–43
Accessories	44–45
Magnetic Central Heating Filter	**46**
Mag One DUO filter	
Heat Emitters	**47–51**
Uflex underfloor heating	47–50
Afinia aluminium radiators	51

VORTEX ECO RANGE

- Outputs from 15–35kW
- Up to 92.7% efficiencies (SAP 2009)
- Riello/ Ecoflam low NOx yellow flame burner
- Up to 5 year guarantee*

A

HVO Compatible

Floor standing models

Product Code	Output		Dimensions			Weight (dry) kg	Burner
	Btu/h	kW	H	W	D		
INTERNAL STANDARD MODELS							
VTXECO15/21	50–70	15–21	859	430	606	97	RDB2.2 BX
VTXECO21/26	70–90	21–26	859	430	606	97	RDB2.2 BX
VTXECO26/35	90–120	26–35	898	470	602	127	RDB2.2 BX
INTERNAL SEALED SYSTEM MODELS							
VTXSECO15/21	50–70	15–21	859	430	606	123	RDB2.2 BX
VTXSECO21/26	70–90	21–26	859	430	606	123	RDB2.2 BX
VTXSECO26/35	90–120	26–35	898	470	602	138	RDB2.2 BX
EXTERNAL STANDARD MODULES (INC FLUE)							
VTXOMECO15/21	50–70	15–21	908	505	800	113	RDB2.2 BX
VTXOMECO21/26	70–90	21–26	908	505	800	113	RDB2.2 BX
VTXOMECO26/35	90–120	26–35	908	505	800	142	RDB2.2 BX
EXTERNAL SEALED SYSTEM MODELS (INC FLUE)							
VTXSOMECO15/21	50–70	15–21	908	505	800	136	RDB2.2 BX
VTXSOMECO21/26	70–90	21–26	908	505	800	136	RDB2.2 BX
VTXSOMECO26/35	90–120	26–35	908	505	800	152	RDB2.2 BX

*When installed by a G1 Installer. Subject to full T&C's.

VORTEX ECO RANGE

Dimensions (mm)

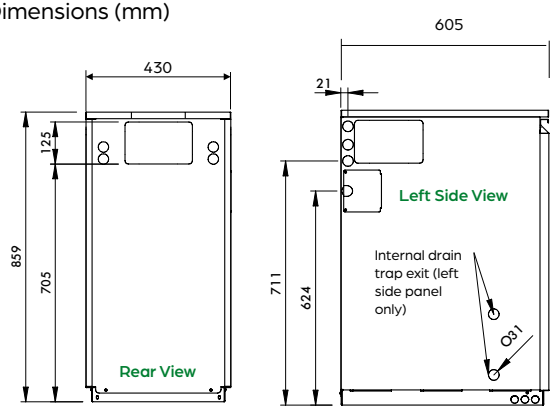

Vortex Eco 15–21, 21–26kW Utility System

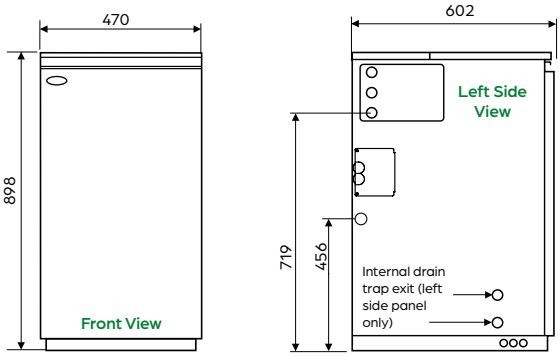

Vortex Eco 26–35kW Utility System

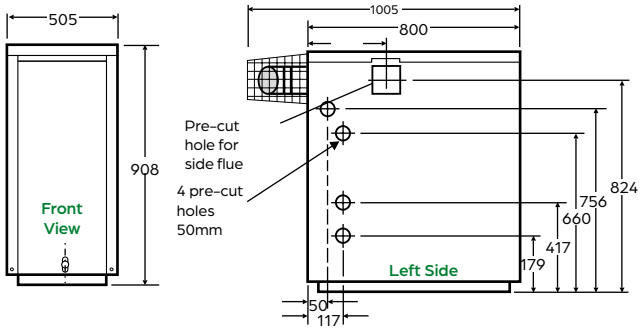

Vortex Eco 15–21, 21–26, 26–35kW External and External System

VORTEX ECO RANGE

Product Code	Output		Dimensions			Weight (dry) kg	Burner
	Btu/h	kW	H	W	D		
WALL HUNG INTERNAL STANDARD MODELS							
VTXWH16/21	55–70	16–21	842	630.5	335.5	85.7	MAX1 LN
WALL HUNG INTERNAL SEALED SYSTEM MODELS							
VTXSWH16/21	55–70	16–21	842	630.5	335.5	97.5	MAX1 LN
WALL HUNG EXTERNAL STANDARD MODELS (INC FLUE)							
VTXOMWH16/21	55–70	16–21	832	684	351	92.1	MAX1 LN
WALL HUNG EXTERNAL SEALED SYSTEM MODELS (INC FLUE)							
VTXSOMWH16/21	55–70	16–21	832	684	351	96.1	MAX1 LN

Dimensions (mm)

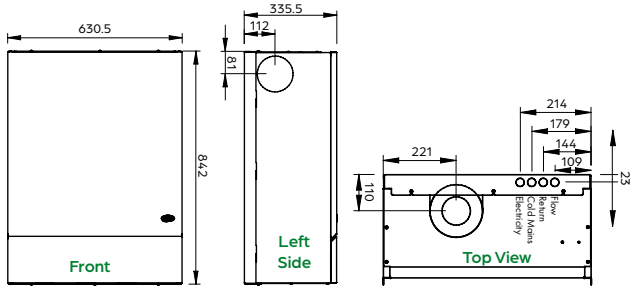

Vortex Eco Wall Hung and Wall Hung System 16–21kW Internal

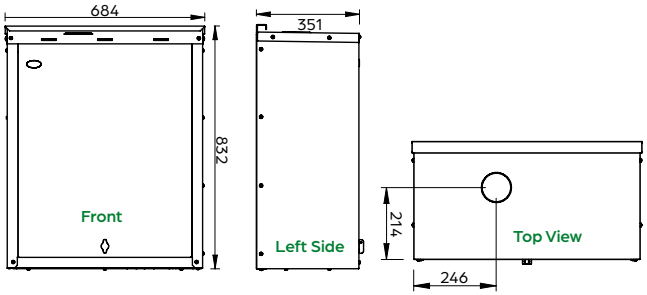

Vortex Eco Wall Hung and Wall Hung System 16–21kW External

VORTEX PRO RANGE

- Outputs from 15–70kW
- Up to 91.7% efficiencies (SAP 2009)
- Riello low NOx yellow flame burner
- Up to 10 year guarantee*

Product Code	Output		Dimensions			Weight (dry) kg	Burner
	Btu/h	kW	H	W	D		
INTERNAL STANDARD MODELS							
VTX15/26	50–90	15–26	858	470	602	130	RDB1 BX
VTX26/46	90–157	26–46	898	470	602	144	RDB2.2 BX
VTX46/70	157–240	46–70	1234	563	782	282	RDB3.2 BX
INTERNAL SEALED SYSTEM MODELS							
VTXS15/26	50–90	15–26	858	470	602	138	RDB1 BX
VTXS26/46	90–157	26–46	898	470	602	168	RDB2 BX
EXTERNAL STANDARD MODULES (INC FLUE)							
VTXOM15/26	50–90	15–26	910	505	796	143	RDB1 BX
VTXOM26/46	90–157	26–46	910	505	796	162	RDB2 BX
VTXOM46/70	157–240	46–70	1239	586	947	288	RDB2.2 BX

Dimensions (mm)

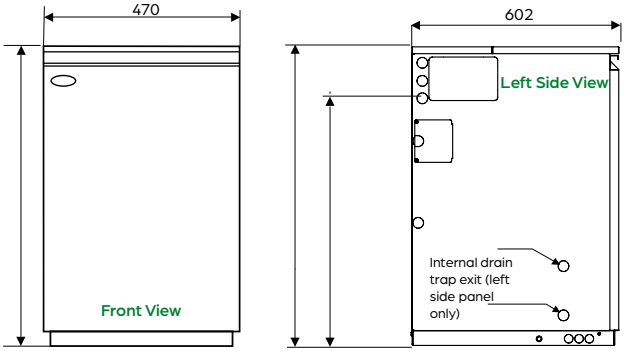

Vortex Pro and Pro System 15–26kW

*When installed by a G1 Installer. Subject to full T&C's.

VORTEX PRO RANGE

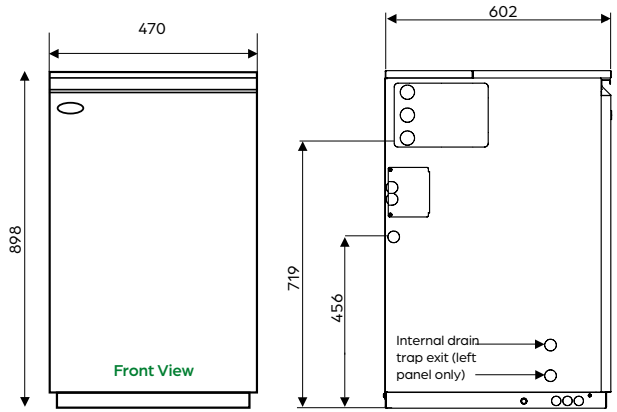

Vortex Pro and Pro System 26–46kW

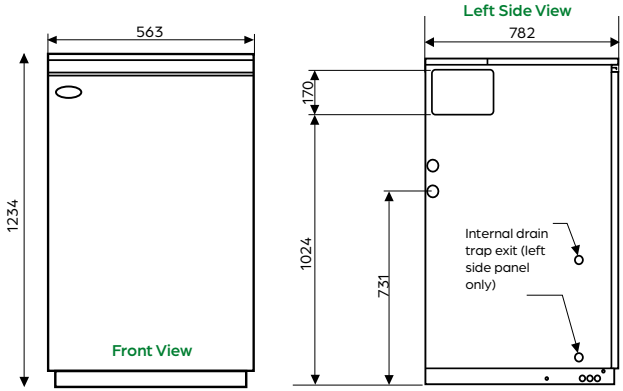

Vortex Pro 46–70kW

VORTEX PRO RANGE

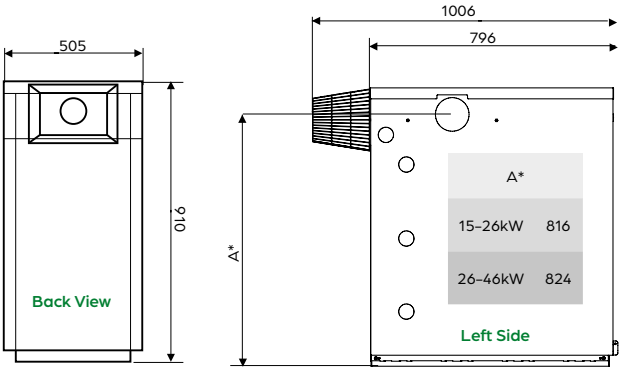

Vortex Pro External 15-26kW & 26-46kW

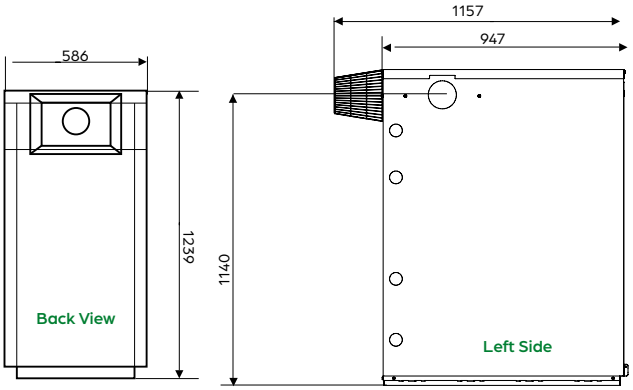

Vortex Pro External 46-70kW

SEALED SYSTEM KITS

Product Code	Description
VTXOMSSKIT26	12 Litre Sealed System Kit for VTXOM15/26
VTXOMSSKIT46	16 Litre Sealed System Kit for VTXOM26/46

VORTEX BOILER HOUSE

- Outputs from 15-70kW
- Up to 91.7% efficiencies (SAP 2009)
- Riello low NOx yellow flame burner
- Up to 5 year guarantee*

Product Code	Output		Dimensions			Weight (dry) kg	Burner
	Btu/h	kW	H	W	D		
INTERNAL BOILER HOUSE MODELS - RED CASED							
VTXBH1526	50-90	15-26	891 [1]	431	594 [2]	125	RDB2.2 BX
VTXBH2646	90-157	26-46	877 [1]	455	591 [2]	145	RDB2.2 BX
VTXBH4670	157-240	46-70	1078 [1]	542	765 [2]	301	RDB2.2 BX

[1] Including dual thermostat
[2] Including burner

Dimensions (mm)

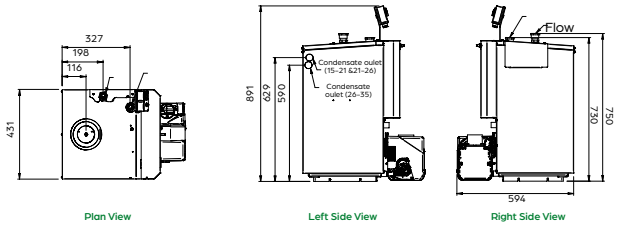

Vortex Boiler House 15-26kW

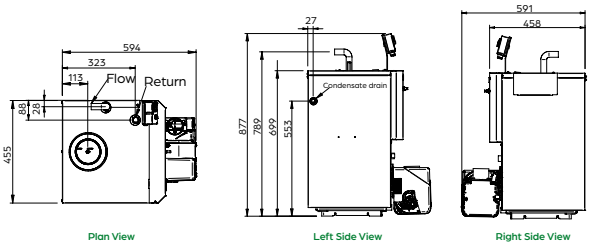

Vortex Boiler House 26-46kW

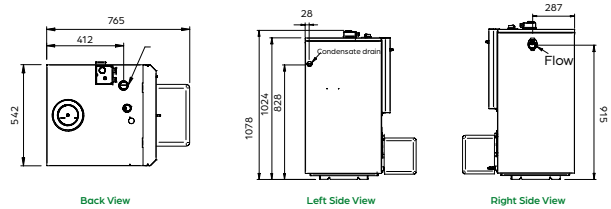

Vortex Boiler House 46-70kW

*When installed by a G1 Installer. Subject to full T&C's.

VORTEX PRO COMBI RANGE

- Outputs from 21–36kW
- Up to 94.5% efficiencies (SAP 2009)
- Riello low NOx yellow flame burner
- Up to 10 year guarantee*

A
B

HVO

Product Code	Output		Dimensions			Weight (dry) kg	Burner
	Btu/h	kW	H	W	D		
INTERNAL COMBI MODELS							
VTXCOMBI21	70	21	860	614	614	160	RDB2.2 BX
VTXCOMBI26	90	26	860	614	614	177	RDB1 BX
VTXCOMBI36	123	36	900	614	614	200	RDB2.2 BX
INTERNAL COMBI XS MODEL							
VTXXSCOMBI26	90	26	857	515	606	163	RDB2.2 BX
EXTERNAL COMBI MODULES (INCL FLUE)							
VTXOMCOMBI21	70	21	945	658	754	181	RDB2.2 BX
VTXOMCOMBI26	90	26	945	658	754	206	RDB1 BX
VTXOMCOMBI36	123	36	945	658	754	225	RDB2.2 BX

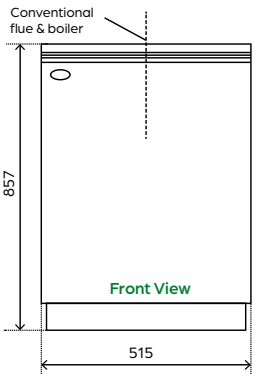

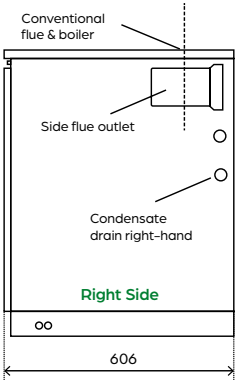

Vortex Pro Combi XS 26kW

*When installed by a G1 Installer. Subject to full T&C's.

VORTEX PRO COMBI RANGE

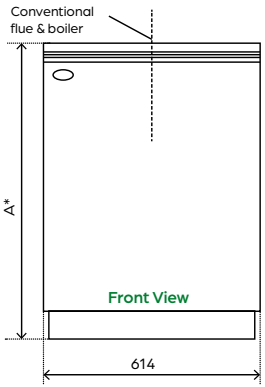

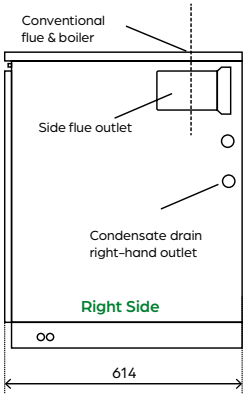

A*	
21kW 26kW	860

Vortex Pro Combi 21kW, 26kW, 36kW

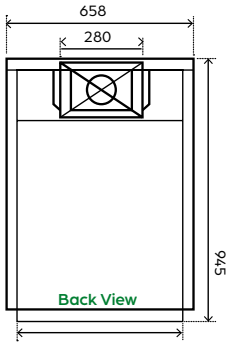

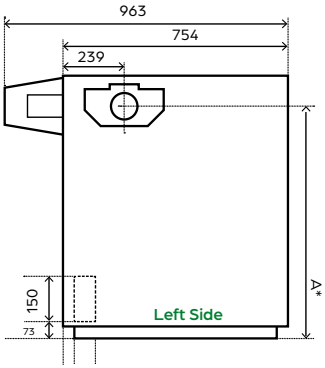

A*	
21kW 26kW	828

Vortex Pro Combi External 21kW, 26kW, 36kW

YELLOW SYSTEM

Low level balanced flue kits

- Low level
- Suitable for all internal Vortex models
- Stainless steel
- Terminal section and guard are black painted

Product Code	Output	Description
EZ90B	15 – 26 kW	Standard flue kit – Walls up to 450mm Includes s/s terminal guard (Black painted finish)
EZ90SB		Short flue kit – Single skin walls up to 230mm Includes s/s terminal guard (Black painted finish)
X90S		Extension 225mm
X90M		Extension 450mm
X90L		Extension 675mm
EZELB90		90° Elbow Kit (Includes 90° elbow and 225mm extension)
EZ45/90		45° Elbow Kit (Includes 45° elbow and 225mm extension)
EZ45/90S		Short elbow only up to 26kW
GPDA90B		Adjustable plume diverter kit 80mm x 2 metres (Black painted finish)
GPD250EXT/90B		Extension 250mm (Black painted finish)
GPD500EXT/90B		Extension 500mm (Black painted finish)
GPD1000EXT/90B		Extension 1000mm (Black painted finish)
GPDA45/90B		45° Elbow (Black painted finish)
GPDBRKT90B		Wall bracket (Black painted finish)
EZ200B	26 – 70 kW	Standard flue kit – Walls up to 450mm Includes s/s terminal guard (Black painted finish)
EZ200SB		Short flue kit – Single skin walls up to 230mm Includes s/s terminal guard (Black painted finish)
X200S		Extension 225mm
X200M		Extension 450mm
X200L		Extension 675mm
EZELB200		90° Elbow Kit (Includes 90° elbow and 225mm Extension)
EZ45/200		45° Elbow Kit (Includes 45° elbow and 225mm Extension)
EZ45/200S		Short elbow only above 26kW
GPDA200B		Adjustable plume diverter kit 100mm x 2 metres (Black painted finish)
GPD250EXT/200B		Extension 250mm (Black painted finish)
GPD500EXT/200B		Extension 500mm (Black painted finish)
GPD1000EXT/200B		Extension 1000mm (Black painted finish)
GPDA45/200B		45° Elbow (Black painted finish)
GPDBRKT200B		Wall bracket (Black painted finish)

WHITE SYSTEM

High level/ vertical balanced flue kits

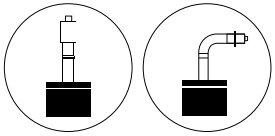

- High level/ Vertical
- Easy to install
- Suitable for all internal Vortex models
- Stainless steel white powder coated

Product Code	Output	Description
HLK015090	15 – 26 kW	1.2 metre High level adjustable flue kit c/w 90° elbow and terminal
VTK055090		Adjustable Vertical 3 metre flue kit c/w terminal and storm collar
EXTK31225/90		Extension 225mm (9”)
EXTK09450/90		Extension 450mm (18”)
EXTK11950/90		Extension 950mm (38”)
EXTK13ADJ90		Adjustable extension 275 – 450mm (10 to 18”)
ELBK2145/90		45° Elbow
VTMF90/200		Pitched master flashing [aluminium]
VTK25P90/X		Pitched flashing [lead replacement]
VTK27F90		Flat flashing
BRK2990		Wall bracket [galvanised]
VTTEXT90		Black extension for vertical terminal 80mm x 1mtr
HLK0290200	26 – 70 kW	1.2 metre High level adjustable flue kit c/w 90° elbow and terminal
VTK0690200		Adjustable Vertical 3 metre flue kit c/w terminal and storm collar
EXTK32225/200		Extension 225mm (9”)
EXTK10450/200		Extension 450mm (18”)
EXTK12950/200		Extension 950mm (38”)
EXTK14ADJ200		Adjustable extension 275 – 450mm (10 to 18”)
ELBK2245/200		45° Elbow
VTMF90/200		Pitched master flashing [aluminium]
VTK26P240		Pitched flashing [lead]
VTK26P200X		Pitched flashing [lead replacement, incl collar]
VTK 28F200		Flat flashing
BRK30200		Wall bracket [galvanised]
VTTEXT200		Black extension for vertical terminal 100mm x 1mtr

NOTE:

High level/vertical flues, extensions and accessories can be used with all internal boilers.

Vertical flue kits can be extended to a maximum straight length of 12m. Deduct 1m for each 45° elbow (max 6 elbows).

High level flue kits can be extended to a maximum length of 10m. Deduct 1m for each 45°elbow (max 6 elbows).

For information on Plume Diverter Kits for high level flues, please contact our Technical Department.

GREEN SYSTEM

External High Level/ Vertical balanced flue kits

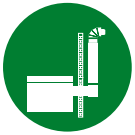

- High level/ Vertical
- Stainless steel, black painted
- Suitable for all internal & external Vortex models
- Twin wall insulated vertical extensions

Product Code	Output	Description
GK90B	15 – 26 kW	Standard Starter Kit (Black painted finish)
GK90SB		Short Starter Kit (Black painted finish)
GKM90B		Outdoor Module Starter (Elbow) + Test point
GKM90CB		Outdoor Module Starter (Straight) + Test point
GX150/90B		Extension 150mm
GX250/90B		Extension 250mm
GX450/90B		Extension 450mm
GX950/90B		Extension 950mm
GXA250/90B		Adjustable Extension 195 – 270mm
GE45/90B		45° Elbow
GTL90B		Straight Terminal Only
GTH90B		High level 90° Terminal
GTV90B		Vertical Terminal
GWB90B		Wall Bracket
GEB90B		Extended Wall Bracket
GK200B	26 – 70 kW*	Standard Starter Kit (Black painted finish)
GK200SB		Short Starter Kit (Black painted finish)
GKM200B		Outdoor Module Starter (Elbow) + Test point
GKM200CB		Outdoor Module Starter (Straight) + Test point
GX150/200B		Extension 150mm
GX250/200B		Extension 250mm
GX450/200B		Extension 450mm
GX950/200B		Extension 950mm
GXA250/200B		Adjustable Extension 195 – 270mm
GE45/200B		45° Elbow
GTL200B		Straight Terminal Only
GTH200B		High level 90° Terminal
GTV200B		Vertical Terminal
GWB200B		Wall Bracket
GEB200B		Extended Wall Bracket
CFA15/70	12–70	CF Adaptor/Connector from Orange to Green System

NOTE:
***The Grant Eco Outdoor Modules VTXOMECO2635 and VTXSOMECO26/35 use the smaller 15–26 flue pipe.**

Please use extensions from the Yellow System to extend starter kits horizontally.

The CFA15/70 is to only be used with the Grant Green and Orange Flue System. Fitting with any other flue system could invalidate the warranty of the boiler. If the CFA15/70 is not sent with components of the Green or Orange Systems, then full installation details will be required prior to despatch.

ORANGE SYSTEM

Conventional flue kits

- Conventional flexi kits
- Smooth bore stainless steel liner
- White powder coated extensions
- Suitable for all internal Vortex models

Product Code	Output	Description
GFKIT6/100	15 – 46 kW	Flexi Kit 100mm dia x 6m
GFKIT8/100		Flexi Kit 100mm dia x 8m
GFKIT10/100		Flexi Kit 100mm dia x 10m
GFKIT11/100		Flexi Kit 100mm dia x 11m
GFKIT12/100		Flexi Kit 100mm dia x 12m
GFKIT14/100		Flexi Kit 100mm dia x 14m
GFKIT16/100		Flexi Kit 100mm dia x 16m
WX150/100		White Extension 150mm x 100mm dia
WX250/100		White Extension 250mm x 100mm dia
WX450/100		White Extension 450mm x 100mm dia
WX950/100		White Extension 950mm x 100mm dia
WXA250/100		235mm x 300mm x ø100mm White Adjustable Extension
WE45/100		White 45° Elbow x 100mm dia
GFKIT6/125	46 – 70 kW	Flexi Kit 125mm dia x 6m
GFKIT8/125		Flexi Kit 125mm dia x 8m
GFKIT10/125		Flexi Kit 125mm dia x 10m
GFKIT11/125		Flexi Kit 125mm dia x 11m
GFKIT12/125		Flexi Kit 125mm dia x 12m
GFKIT14/125		Flexi Kit 125mm dia x 14m
GFKIT16/125		Flexi Kit 125mm dia x 16m
WX150/125		White Extension 150mm x 125mm dia
WX250/125		White Extension 250mm x 125mm dia
WX450/125		White Extension 450mm x 125mm dia
WX950/125		White Extension 950mm x 125mm dia
WXA250/125		235mm x 300mm x ø125mm White Adustable Extension

Flexi Kit includes: Terminal/top plate/flexi-flue adaptor assembly, adaptor to flexi, boiler flue connector, locking band and fixing screws, plus tube of silicon and length of smooth bore insulated flexible flue liner.

NOTE: Maximum vertical height from top of the boiler to the terminal is 19 metres. Maximum of 2 x 45° elbows can be used.

RED SYSTEM

Flexi Vertical balanced flue kits

- Balanced flexi kits
- Smooth bore stainless steel inner and outer liners
- Suitable for all internal Vortex up to 26kW

Product Code	Output	Description
GFXBF6/26COMR	15 – 26 kW	6m Balanced Flexi Liner Kit
GFXBF8/26COMR		8m Balanced Flexi Liner Kit
GFXBF10/26COMR		10m Balanced Flexi Liner Kit
GFXBF12/26COMR		12m Balanced Flexi Liner Kit
EXTK31225/90		Extension 225mm (9")
EXTK09450/90		Extension 450mm (18")
EXTK11950/90		Extension 950mm (38")
EXTK13ADJ90		Adjustable extension 275 – 450mm (10 to 18")
ELBK2145/90		45° elbow

Liner Kit includes: 125mm flexi liner, 80mm 316 stainless steel smooth bore flexi liner, Boiler Connector, Telescopic Extension, Rigid to Flexi Adaptor and Terminal Assembly (approximate height above boiler case 820 – 1220mm)

NOTE: Maximum vertical height from top of the boiler to the terminal is 20m. Deduct 1m for each 45° elbow (max 4 elbows).

FIND THE RIGHT FLUE IN 3 EASY STEPS

with our handy flue configurator tool

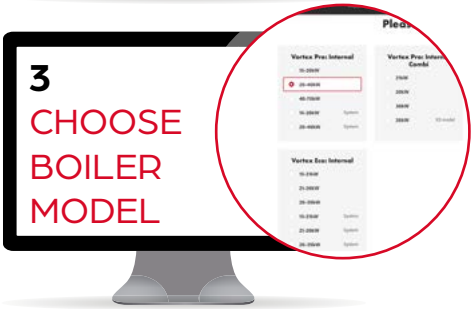

Scan the QR code below or visit:
www. grantuk.com/professional/products/flue-configurator

SCAN

AERONA³ R32 HEAT PUMPS

- Outputs from 6kW up to 17kW
- R32 refrigerant
- In-built weather compensation
- In-built frost protection
- Up to 7 year guarantee*

A+++
EN14825: SSHEE W45

MCS CERTIFIED

NATIONAL HEAT PUMP AWARDS 2022 WINNER

*When installed by a G1 Installer.
Subject to full T&C's.

HPID6R32BODY

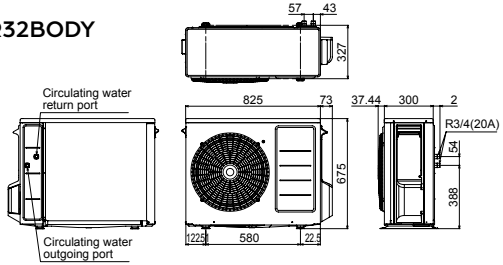

HPID10R32BODY

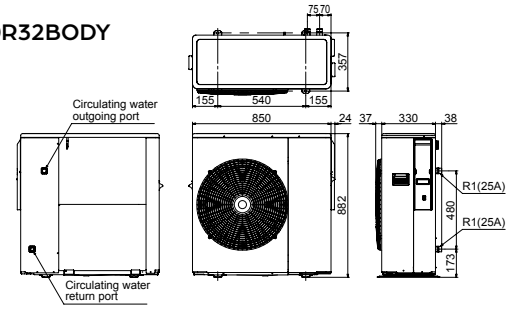

HPID13R32BODY & HPID17R32BODY

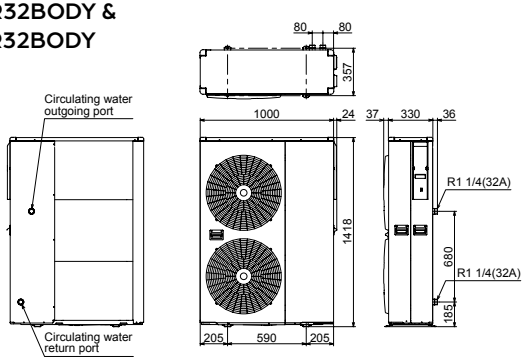

AERONA³ R32 HEAT PUMPS

Model		HPID6R32	HPID10R32	HPID13R32	HPID17R32
ErP Rating (heating @35°C flow) EN14825: SSHEE W45		A+++	A+++	A+++	A+++
Height (mm)		675	882	1418	1418
Width (mm)		898	874	1024	1024
Depth (mm)		379.4	405	403	403
Weight (kg full)		52.8	71.8	101	120
Heating Capacity (kW) (BS EN 14511 air 7°C/ Water 35°C)		6.92	11.1	13.6	18.0
Power input (kW) (BS EN 14511 air 7°C/ Water 35°C)		1.41	2.10	2.59	3.76
COP (at 7°C air/ 35°C flow)		4.91	5.28	5.25	4.79
SCOP (average climate conditions) 35°C		4.61	5.20	5.40	4.54
Refrigerant (R32) (kg)		0.80	1.55	2.20	2.80
Operating voltage (v)		230	230	230	230
Water connections (BSPF)		3/4"	1"	1 ¼"	1 ¼"
Min/max operating temperatures (Air °C)		-20/43	-20/43	-20/43	-20/43
Sound power level at 1m (dB(A)) (BS EN ISO 3743-1:2010)		65.2	64	60.8	61.6
Sound pressure level at 1m (dB(A)) (Q=1)		54.2	53	49.8	50.6
Electrical Installation Requirements					
Max running current (A)		11.2	17.5	23.0	25.3
MCB	Rating (A)	16	20	32	32
	Type	C	C	C	C

Compatible with Homely

*when installed with the classic remote controller

AERONA³ R32 CONTROLS

REMOTE CONTROLLER	
HPIDR32CON6	Aerona³ R32 Remote Controller Kit (HPID6R32)
HPIDR32CON10	Aerona³ R32 Remote Controller Kit (HPID10R32)
HPIDR32CON1317	Aerona³ R32 Remote Controller Kit (HPID13R32 & HPID17R32)
SMART CONTROLLER	
HPIDR32SMART6	Aerona³ R32 Smart Controller Kit (HPID6R32)
HPIDR32SMART10	Aerona³ R32 Smart Controller Kit (HPID10R32)
HPIDR32SMART1317	Aerona³ R32 Smart Controller Kit (HPID13R32 & HPID17R32)
HP32SMART6PP	Aerona³ R32 Smart Controller Kit for Pre Plumbed Cylinder (HPID6R32)
HP32SMART10PP	Aerona³ R32 Smart Controller Kit for Pre Plumbed Cylinder (HPID10R32)
HP32SMART1317PP	Aerona³ R32 Smart Controller Kit for Pre Plumbed Cylinder (HPID13R32 & HPID17R32)
HPIDSMARTRECEIVER	Aerona³ Smart Wireless Receiver
HPIDSMARTWRT	Aerona³ Smart Wireless Thermostat (no receiver)
HPIDSMARTWRTR	Aerona³ Smart Wireless Thermostat (with receiver)
HPIDSMARTHRT	Aerona³ Smart Wired Thermostat
HPIDSMARTSEN2	Aerona³ Smart Temperature Sensor 2m *
HPIDSMARTSEN4	Aerona³ Smart Temperature Sensor 4m *
HPIDSMARTFLO	Aerona³ Smart Flow Sensor *
HPIDSMARTIMM	Aerona³ Smart Immersion Relay
HPIDSMARTWSEN	Aerona³ Smart Outdoor Sensor *
HPIDSMARTHUB	Aerona³ Smart Controller Wi-Fi Hub *
HPIDSMARTCONKIT	Aerona³ Smart Controller - Wiring Centre - Sensors - Hub

*supplied with Smart Controller Kits

Remote Controller

Smart Controller

HEAT PUMPS

AERONA³ R32 CONTROLS

AERONA SMART CONTROLLER

	TOUCHSCREEN DISPLAY	WIRING CENTRE
Power supply	12 VDC - via wiring centre	230 VAC, 50 Hz
Current	0.15 A	0.4 A
Display	Touch screen, graphical 480 x 272 px	-
Protection class	IP 20	IP 20
Ambient temperature	0 - 50°C	0 - 50°C
Storage temperature	0 - 65°C	0 - 65°C
Terminals	Screw terminals: 0,15 - 1,5mm²	Screw terminals at supply voltage side - 1.0-2.5 mm² Screw terminals at control voltage side - 0.14-1.0 mm²
Dimensions	144 x 97 x 20mm	234 x 225 x 64mm
Standards	PN-EN 60730-2-9 PN-EN-60730-1	PN-EN 60730-2-9 PN-EN-60730-1
Software class	A, acc. to PN-EN 60730-1	A, acc. to PN-EN 60730-1
Installation method	Wall mounted	Wall mounted

Dimensions (mm)

Touchscreen Display

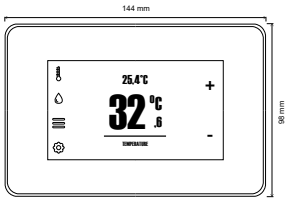

Wiring Centre

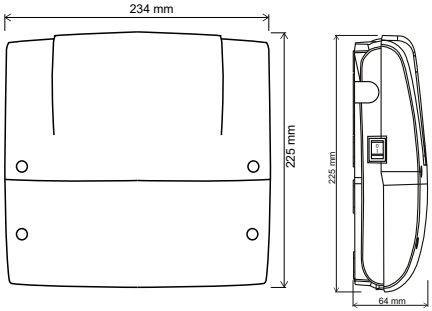

AERONA³ R32 ACCESSORIES

HPIDSYSLLHKIT	System combined volumiser/low loss header (70kW) kit c/w 2x28mm valves
HPWPR1	Water Priority Relay
HPWPR2	Water Priority Relay (2 CH Zone)
EP001	Wiring centre
EP002	Heat Pump wiring interface
HPIDT205	7 day Immersion Programmer (legionella)
HPIDFOOT/KIT2	Flexi-foot kit with fixings (2 x 600mm)
HPIDINSU/KIT	Through wall insulation kit to fit 22-28mm flexi hose
HPID120	28mm 3-Port diverter valve
HPID121	10k Ohm cylinder sensor
HPIDTM4	DHW Programmer
EML/100A	Wall mounted electricity meter
HPIDHEATMETER2	Heat meter kit (compatible with HPID6R32 & HPID10R32)
HPIDHEATMETER	Heat meter kit (compatible with HPID13R32 & HPID17R32)
INHIB03	Inhibitor/ anti-freeze 25 litre
HPIDAC32	AC isolator 32amp
HPIDWALLBRKT2	Heat pump wall bracket (M-Type up to 90kg. HPID6R32 & HPID10R32 only)
HPIDWALLBRKT3	Heat pump wall bracket (Type 2 up to 250kg) BLACK
VM01DUO	Mag One DUO 22mm - 28mm central heating magnetic filter
HPAWSSK12	12 Litre sealed system kit for Aerona ASHP
HPAWSSK18	18 Litre sealed system kit for Aerona ASHP
HPAWSSK50	50 Litre sealed system kit for Aerona ASHP
HPIDVOL30EXT	30 Litre external volumiser c/w 3kW backup heater (for HPID10R32, HPID3R32, HPID17R32)
HPIDVOL30EXT6	30 Litre external volumiser c/w 3kW backup heater (for HPID6R32)
HPIDVOL50	50 Litre internal volumiser c/w immersion
HPIDVOL50X	50 Litre internal volumiser w/o immersion

AERONA³ R32 INSTALLATION PACKS

FOR USE WITH REMOTE CONTROLS	HPIDR32PACKA	**Aerona³ installation pack A - S-Plan Non Pre-plumbed with Low Loss Header** (Components: combined volumiser/low loss header, isolation valves, 7 day Immmersion Programmer (legionella), flexi foot fit, Mag One DUO filter, 18L sealed system kit, wiring centre c/w DHW priority, DHW programmer, 32A AC Isolator)
	HPIDR32PACKK	**Aerona³ installation pack K - S-Plan Non Pre-plumbed** (Components: 7 day Immmersion Programmer (legionella), flexi foot fit, Mag One DUO filter, 18L sealed system kit, wiring centre c/w DHW priority, DHW programmer, 32A AC Isolator)
	HPIDR32PACKB	**Aerona³ installation pack B - S-Plan for Grant Pre-plumbed cylinders with Low Loss Header** (Components: combined volumiser/low loss header, isolation valves, 7 day Immmersion Programmer (legionella), flexi foot fit, Mag One DUO filter, 18L sealed system kit, wiring centre c/w DHW priority, DHW programmer, 32A AC Isolator)
	HPIDR32PACKL	**Aerona³ installation pack L - S-Plan for Grant Pre-plumbed cylinders** (Components: flexi foot fit, Mag One DUO filter, 18L sealed system kit, DHW programmer, 32A AC Isolator)
	HPIDR32PACKC	**Aerona³ installation pack C - Direct Non Pre-plumbed with Low Loss Header** (Components: combined volumiser/low loss header, isolation valves, DHW Programmer, flexi foot kit, Mag One DUO filter, 18L sealed system kit, heat pump wiring interface, hot water priortity relay, 28mm 3-port diverter valve, cylinder sensor, 7 day immersion Programmer (legionella), 32A AC isolator)
	HPIDR32PACKM	**Aerona³ installation pack M - Direct Non Pre-plumbed cylinders** (Components: DHW Programmer, flexi foot kit, Mag One DUO filter, 18L sealed system kit, heat pump wiring interface, hot water priortity relay, 28mm 3-port diverter valve, cylinder sensor, 7 day immersion Programmer (legionella), 32A AC isolator)
FOR USE WITH SMART CONTROLLER	HPIDPACKP	**Aerona installation pack P - Direct S-Plan Non Pre-plumbed 2 Port Valve** (Components: flexi foot kit, Mag One DUO filter, 18L sealed system kit, 32A AC isolator, Immersion Relay)
	HPIDPACKQ	**Aerona installation pack Q - Open Loop Direct Non Pre-plumbed 3 Port Diverter & Mixing Valve** (Components: flexi foot kit, Mag One DUO filter, 18L sealed system kit, 32A AC isolator, Immersion Relay, 3-port mixing valve, Mixing valve actuator)
	HPIDPACKR	**Aerona installation pack R - Open Loop Direct Non Pre-plumbed 3 Port Diverter Valve** (Components: flexi foot kit, Mag One DUO filter, 18L sealed system kit, 32A AC isolator, Immersion Relay, 3-port mixing valve)
	HPIDPACKT	**Aerona installation pack T - S-Plan for Smart Pre-Plumbed Cylinders** (Components: flexi foot kit, Mag One DUO filter, 18L sealed system kit, 32A AC isolator)

AERONA 290

OUR 5TH GENERATION HEAT PUMP

FOR THE DESIGN

Energy efficient R290 refrigerant

Ultra low noise levels

Modern styling & colourway

FOR THE PERFORMANCE

Outputs from 4kW – 15.5 kW

Rated at Air -5°C Water 55°C

Remote monitoring

FOR THE PEACE OF MIND

Performs from -25°C to + 35°C

7 year product guarantee*

Design & on-site technical support

FOR THE NEXT GENERATION

QUIET MARK

A+++

FREE AERONA 290 TRAINING ENQUIRE HERE

GRANTUK.COM

*T&C's Apply

AERONA 290 HEAT PUMPS

- Outputs from 4kW up to 15.5kW
- R290 refrigerant
- Low GWP of 3
- In-built frost protection
- Up to 7 year guarantee*

*When installed by a G1 Installer. Subject to full T&C's.

MCS CERTIFIED

QUIET MARK

A+++

EN14825: SSHEE W45

HPR2904

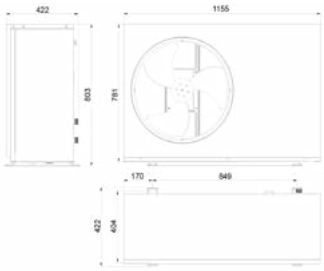

HPR29065 & HPR2909

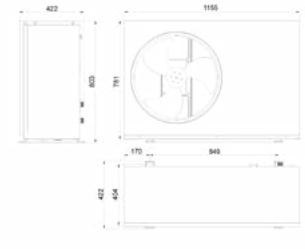

HPR29012 & HPR290155

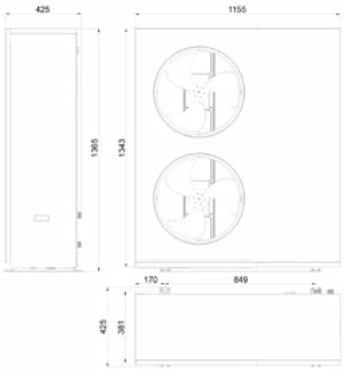

AERONA 290 HEAT PUMPS

Model		HPR2904	HPR29065	HPR2909	HPR29012	HPR290155
ErP Rating (heating @35°C flow) EN14825: SSHEE W5		A+++	A+++	A+++	A+++	A+++
Height (mm)		803	854	854	1365	1365
Width (mm)		1155	1223	1223	1155	1155
Depth (mm)		422	461	461	425	425
Weight (kg full)		102	117	133	157	184
Heating Capacity (kW) (BS EN 14511 air 7°C/ Water 35°C)		4.09	7.62	9.38	12.18	16.16
COP (at 7°C air/ 35°C flow)		4.99	4.95	4.93	4.81	4.72
SCOP (average climate conditions) 35°C		5.00	5.08	4.74	4.74	4.56
Refrigerant (R290) (kg)		0.61	0.83	1.00	1.20	1.65
Operating voltage (v)		230	230	230	230	230
Water connections (BSPF)		1"	1"	1"	1"	1"
Min/max operating temperatures (Air °C)		-25 to 35	-25 to 35	-25 to 35	-25 to 35	-25 to 35
Sound power level at 1m (dB(A)) (BS EN ISO 3743-1:2010)		53.60	54.30	56.80	59.00	63.00
Sound pressure level at 1m (dB(A)) (Q=1)		46.60	47.30	49.30	51.30	55.10
Electrical Installation Requirements						
Max running current (A)		8.3	12.8	16.8	24.8	29.3
MCB	Rating (A)	16	16	20	32	32
	Type	20A Class C	20A Class C	32A Class C	32A Class C	32A Class C

AERONA 290 SMART CONTROLLER	
HP290SMART	Aerona 290 Smart Controller Kit
HP290SMARTPP	Aerona 290 Smart Controller Kit for Pre Plumbed Cylinders
HPIDSMARTRECEIVER	Aerona Smart Wireless Receiver
HPIDSMARTWRT	Aerona Smart Wireless Thermostat (no receiver)
HPIDSMARTWRTR	Aerona Smart Wireless Thermostat (with receiver)
HPIDSMARTHRT	Aerona Smart Wired Thermostat
HPIDSMARTSEN2	Aerona Smart Water Temperature Sensor 2m *
HPIDSMARTSEN4	Aerona Smart Water Temperature Sensor 4m *
HPIDSMARTIMM	Aerona Smart Immersion Relay
HPIDSMARTWSEN	Aerona Smart Air Outdoor Sensor *
HPIDSMARTHUB	Aerona Smart Controller Wi-Fi Hub *

*supplied with Smart Controller Kit

For Smart Controller technical data please refer to page 23.

AERONA 290 INSTALLATION PACKS

HPIDPACKP	Aerona installation pack P - Direct S-Plan Non Pre-plumbed 2 Port Valve (Components: flexi foot kit, Mag One DUO filter, 18L sealed system kit, 32A AC isolator, Immersion Relay)
HPIDPACKQ	Aerona installation pack Q - Open Loop Direct Non Pre-plumbed 3 Port Diverter & Mixing Valve (Components: flexi foot kit, Mag One DUO filter, 18L sealed system kit, 32A AC isolator, Immersion Relay, 3-port mixing valve, Mixing valve actuator)
HPIDPACKR	Aerona installation pack R - Open Loop Direct Non Pre-plumbed 3 Port Diverter Valve (Components: flexi foot kit, Mag One DUO filter, 18L sealed system kit, 32A AC isolator, Immersion Relay, 3-port mixing valve)
HPIDPACKT	Aerona installation pack T - S-Plan for Smart Pre-Plumbed Cylinders (Components: flexi foot kit, Mag One DUO filter, 18L sealed system kit, 32A AC isolator)

AERONA 290 ACCESSORIES

HPIDSYSLLHKIT	System combined volumiser/low loss header (70kW) kit c/w 2x28mm valves
HPIDFOOT/KIT2	Flexi-foot kit with fixings (2 x 600mm)
HPIDINSU/KIT	Through wall insulation kit to fit 22-28mm flexi hose
HPID120	28mm 3-Port diverter valve
EML/100A	Wall mounted electricity meter
HPIDHEATMETER2	Heat meter kit (compatible with HPR2904, HPR29065, HPR2909, HPR29012)
HPIDHEATMETER	Heat meter kit (compatible with HPR290155)
HPIDAC32	AC isolator 32amp
VM01DUO	Mag One DUO 22mm - 28mm central heating magnetic filter
HPAWSSK12	12 Litre sealed system kit for Aerona ASHP
HPAWSSK18	18 Litre sealed system kit for Aerona ASHP
HPAWSSK50	50 Litre sealed system kit for Aerona ASHP
HPIDVOL50	50 Litre internal volumiser c/w immersion
HPIDVOL50X	50 Litre internal volumiser w/o immersion
HPIDWALLBRKT3	Heat pump wall bracket (Type 2 up to 250kg) BLACK

VORTEXAIR HYBRID RANGE

- VortexAir 15–26kW oil boiler
- 17kW Aerona³ air source heat pump
- Boiler can be fitted internally or externally
- Low level balanced flue kit included
- Up to 5 year guarantee*

A+++ Air Source Heat Pump EN14825: SSHEE W45

A Oil Boiler

MCS CERTIFIED

Model			HPIDAIR1526
ErP Rating EN14825: SSHEE W45	Heat Pump	Heating	A+++
	Boiler	Heating	A
Height (mm)			1420
Width (mm)			2047
Depth (mm)			525
Weight (kg)	Heat Pump	Empty	118
	Boiler	Empty	151
	Combined	Empty	269
Boiler Output (kW)			21–2
Heat Pump Capacity (kW)			18.0
Heat Pump Power input (kW) (BS EN 14511 air 7°C/ Water 35°C)			3.76
Heat Pump COP (at 7°C air/ 35°C flow)			4.79
Heat Pump SCOP (average climate conditions) 35°C			4.54
Heat Pump Refrigerant (R32) (kg)			2.80
Heat Pump Operating voltage (v)			230
Heat Pump Flow/ return tappings (BSPF)			1 1/4"
Heat Pump Min/max operating temperatures		Air (°C)	-20/43
Heat Pump Sound power level at 1m (dB(A)) (BS EN ISO 3743-1:2010)			61.6
Heat Pump Sound pressure level at 1m (dB(A)) (Q=1)			50.6
Electrical Installation Requirements			
Max running current (A)			25.3
MCB		Rating (A)	32
		Type	C

VORTEXAIR ACCESSORIES

HPIDHEATMETER	VortexAir Heat Meter Kit
HPIDKW/HMETER	VortexAir DIN rail mounted electricity meter
HPIDFOOT/KIT2	Flexi-foot kit with fixings (2 x 600mm) **

*When installed by a G1 Installer. Subject to full T&C's.
**requires one set for boiler (if installed externally) and one set for heat pump

EVOLINK HYBRID SYSTEM HUB

- Immediately reduce a home's carbon footprint
- Install a heat pump alongside an existing heating system
- Cleverly adds supplementary heat using smart technology
- Selects optimum mode of operation
- Manual override facility to operate boiler when boost is required

Model		EVOLINK
Weight	Empty	29kg
	Full	38kg
Water content		9 Litre
Power supply		230V ~ 1ph 50Hz
Connections	Heating system	28mm copper
	Heat pump	28mm copper
	Boiler	28mm copper
Circulating pump		7m head

Dimensions (mm)

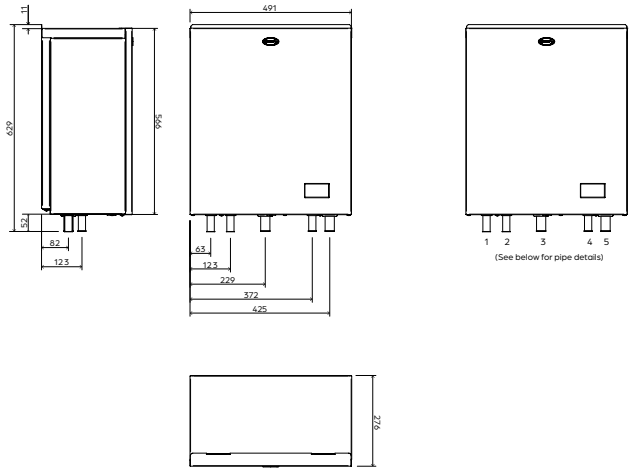

QR CYLINDER RANGE

- Sizes from 150 – 300 litres
- Slimline, Pre-Plumbed and Integrated models
- Fast recovery stainless steel coils
- Labelled tappings and connections
- Supplied with unvented kit as standard (including expansion vessel, inlet manifold, tundish, 2-port motorised valve and dual thermostat)

* Subject to full T&C's.

Single Coil

Model	Actual Capacity (ltrs)	ErP Rating	Expansion vessel (ltrs)	Coil rating primary (kW)	Overall Height (mm)	Overall Diameter (mm)	Weight empty (kg)	Weight full (kg)
QRSC150	136	C	19	32.0	1117	550	45	181
QRSC180	167	C	19	32.0	1305	550	50	217
QRSC210	197	C	19	32.0	1491	550	54	251
QRSC250	237	C	19	32.0	1744	550	62	299
QRSC300	289	C	24	34.0	2054	550	68	357

Single Coil | Slimline

Model	Actual Capacity (ltrs)	ErP Rating	Expansion vessel (ltrs)	Coil rating primary (kW)	Overall Height (mm)	Overall Diameter (mm)	Weight empty (kg)	Weight full (kg)
QRSC150SL	141	C	19	30.0	1458	478	39	180
QRSC180SL	171	C	19	30.0	1708	478	43	214
QRSC210SL	201	C	19	30.0	2021	478	50	251

Single Coil | Pre-Plumbed

Model	Actual Capacity (ltrs)	ErP Rating	Expansion vessel (ltrs)	Coil rating primary (kW)	Overall Height (mm)	Overall Diameter (mm)	Weight empty (kg)	Weight full (kg)
QRSC210PP	197	C	19	32.0	1493	550	59	256
QRSC250PP	237	C	19	32.0	1744	550	67	304
QRSC300PP	289	C	24	34.0	2057	550	73	362

Single Coil | Smart Pre-Plumbed

Model	Actual Capacity (ltrs)	ErP Rating	Expansion vessel (ltrs)	Coil rating primary (kW)	Overall Height (mm)	Overall Diameter (mm)	Weight empty (kg)	Weight full (kg)
QRSMART180PP	167	C	19	32.0	1305	550	55	222
QRSMART210PP	197	C	19	32.0	1493	550	59	256
QRSMART250PP	237	C	19	32.0	1744	550	67	304
QRSMART300PP	289	C	24	34.0	2057	550	73	362

QR CYLINDER RANGE

Single Coil | Integrated

Model	Actual Capacity (ltrs)	ErP Rating	Expansion vessel (ltrs)	Coil rating primary (kW)	Overall Height (mm)	Overall Width (mm)	Overall Depth (mm)	Weight empty (kg)	Weight full (kg)
QRINTSC210	197	C	19	32.0	1855	594	727*	139	375

Twin Coil

Model	Actual Capacity (ltrs)	ErP Rating	Expansion vessel (ltrs)	Coil rating primary (kW)	Solar Coil (kW)	Overall Height (mm)	Overall Diameter (mm)	Weight empty (kg)	Weight full (kg)
QRTC210	192	C	19	32.0	19.7	1490	550	59	251
QRTC250	233	C	19	32.0	20.7	1741	550	65	298
QRTC300	284	C	24	34.0	22.1	2054	550	77	361

Accessories

MB-24	Quick Recovery Cylinder Plinth
MB-50	Quick Recovery Cylinder Stand

Models shown:

QRSMART180PP – 180 Litre Smart Pre-Plumbed cylinder

MB-50 – Quick Recovery cylinder stand

HPIDVOL50 – 50 Litre internal volumiser

IMPORTANT

A new range of Quick Recovery cylinders (QR2) will be replacing the current cylinder models. Please check with Grant UK for stock availability.

Kindly note that we will continue to supply the existing QR cylinder range while stocks last. Orders for the new QR2 models will only be accepted once inventory of the corresponding current models has been depleted.

Data for the Quick Recovery 2 Range is available here:

QR CYLINDER RANGE

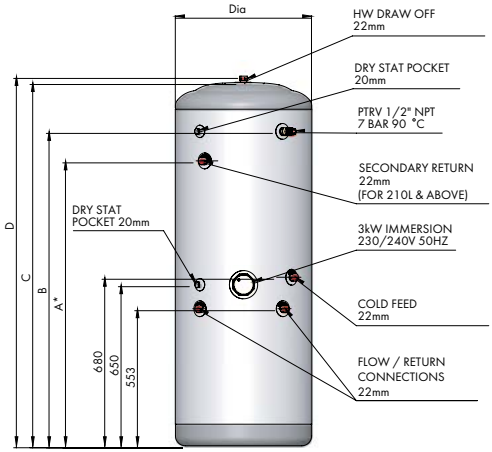

SINGLE COIL

Dimensions (mm)	150L	180L	210L	250L	300L
A*	–	–	1150	1400	1600
B	893	1081	1269	1519	1832
C	1091	1279	1467	1717	2030
D	1117	1305	1491	1744	2054
Diameter	550	550	550	550	550

*Secondary return on 210, 250 & 300 litre models only

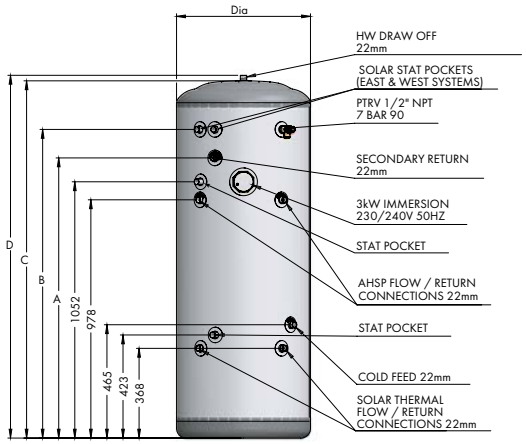

TWIN COIL

Dimensions (mm)	210L	250L	300L
A	1150	1401	1601
B	1267	1518	1831
C	1467	1717	2030
D	1490	1741	2054
Diameter	550	550	550

QR CYLINDER RANGE

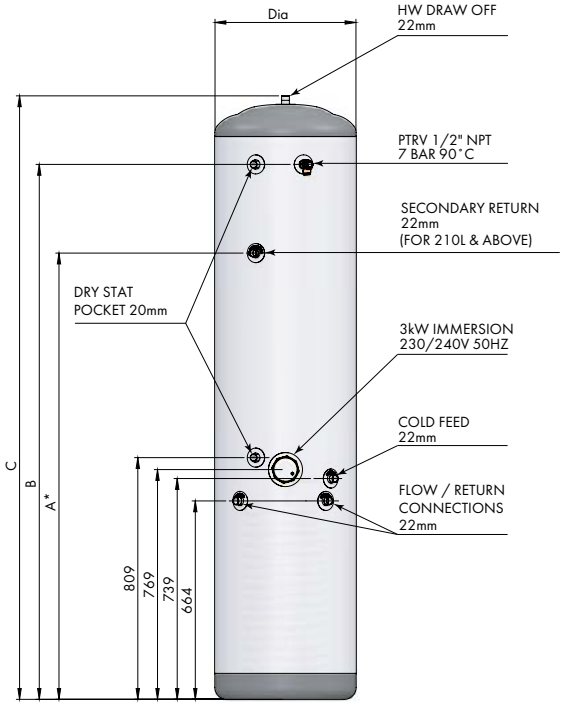

SINGLE COIL | SLIMLINE

Dimensions (mm)	150L	180L	210L
A*	–	–	1494
B	1228	1478	1791
C	1458	1708	2021
Diameter	478	478	478

*Secondary return on 210 litre model only

QR CYLINDER RANGE

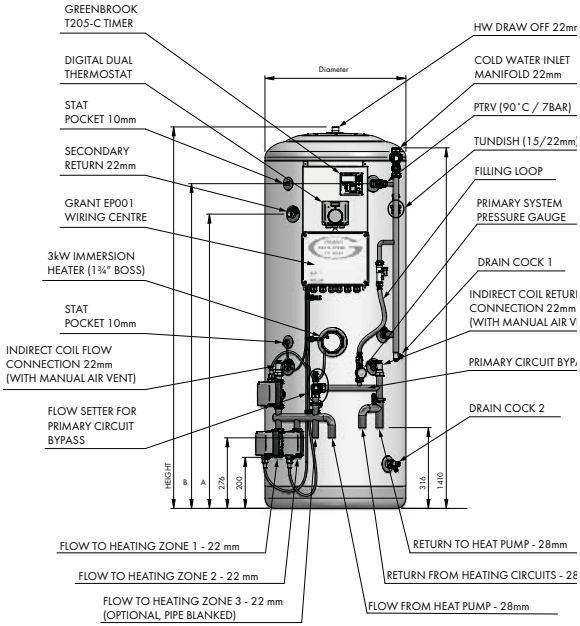

SINGLE COIL | PRE-PLUMBED

Dimensions (mm)	210L	250L	300L
A	1150	1400	1600
B	1269	1519	1832
Height	1493	1744	2057
Diameter	550	550	550

QR CYLINDER RANGE

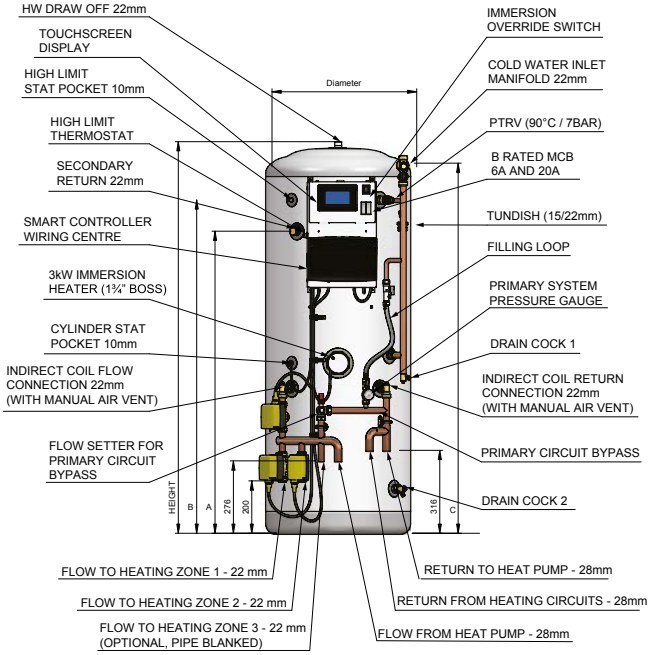

SINGLE COIL | SMART PRE-PLUMBED

Dimensions (mm)	180L	210L	250L	300L
A*	–	1150	1400	1600
B	1081	1269	1519	1832
Height	1305	1493	1744	2057
Diameter	550	550	550	550

*Secondary return on 210, 250 and 300 litre models only

QR CYLINDER RANGE

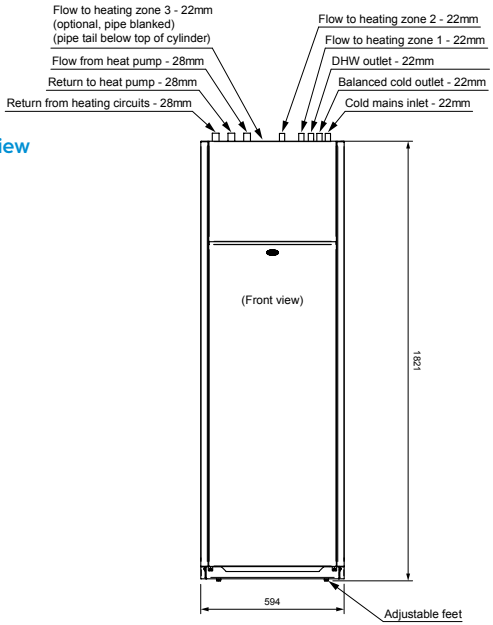

Front View

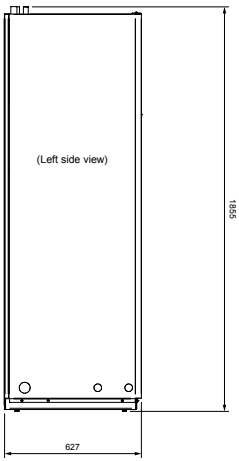

Side View

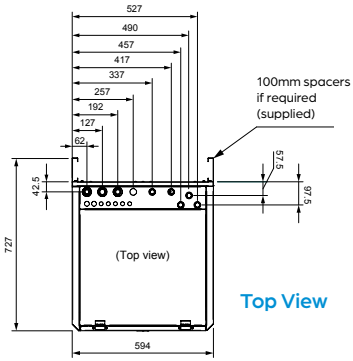

Top View

SINGLE COIL | INTEGRATED

SOLAR THERMAL SYSTEMS

- 82.6% collector efficiency
- Significantly lower CO_2 emissions
- Helps reduce annual fuel bills
- Minimum maintenance
- Up to 10 year guarantee*

Solar Keymark

*When installed by a G1 Installer. Subject to full T&C's.

Collector Information	
Length (mm)	2043
Width (mm)	1143
Depth (mm)	80
Collector gross area (m^2)	2.34
Aperture/absorber area (m^2)	2.14
Weight (kg)	40
Glass type	ESG, Durasolar P+ Sandy
Glass Thickness (mm)	3.2
Efficiency (%)	82.6
Effective thermal capacity(KJ/m^2K^2)	12620
Conversion factor (η)	0.826
Linear heat loss coefficient (a_1)	4.4
Linear heat loss coefficient (a_2) (W/m^2K^2)	0.008
Stagnation temperature*(°C)	177
Maximum operating pressure (bar)	10
Fluid content (L)	1.6
Tilt angle (maximum/minimum) (°)	20/90
Pressure drop (at 2.5l/min solar fluid) (mbar)	105

*Test conditions – Irradiance 1000W/m^2 Ambient temperature 30°C

SOLAR THERMAL SYSTEMS

Solar radiation in the UK and Ireland

The diagram below shows the total average solar radiation falling on 1m² surface, inclined at 30° to the horizontal, measured in kilowatt-hours. The average property requires approximately 3,000 kWh per year for domestic water heating.

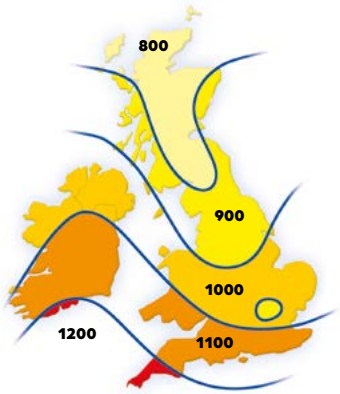

How to calculate the number of collectors required

Direction of roof	Solar radiation (see above map) kWh/year	Number of people per household <3	4	5	6
South	900 – 1000	2	2	2	3
	1000 – 1100	2	2	2	2
	1100 – 1200	2	2	2	2
South West/ South East	900 – 1000	2	2	3	3
	1000 – 1100	2	2	2	3
	1100 – 1200	2	2	2	2
West	900 – 1000	2	3	3	4
	1000 – 1100	2	2	3	3
	1100 – 1200	2	2	2	3
East	900 – 1000	2	3	3	4
	1000 – 1100	2	3	3	3
	1100 – 1200	2	2	2	3

Cylinder requirements are 50-60 litres capacity per m² of nett collector area. To simplify this, for a 2-collector system of 2 x 2.14 = 4.28m², you would require a cylinder of approximately 200-250 litres. This should be sufficient for 4 people and satisfy up to 70% of your hot water demand per annum.

SAHARA PORTRAIT ON-ROOF KITS

GSSKIT0 1 Collector Bronze On-Roof	QTY	Product Code
Solar Collector (Bronze)	1	GS222773C
Connection kit flow and return	1	GS222146X
1 Collector on roof extra set	1	GS222742
Pump Station	1	GS222154HX
Controller	1	GS222765
Solar Fluid 20 litre	1	GS222076
Expansion Vessel 18 litre	1	GS222095
Expansion Vessel pipe connections	1	GS222074
Expansion Vessel bracket and valve	1	GS222073
Roof Anchors:		
Anchors for profile tile (Pack of 2)	2 Pks*	GS222148
Anchors for flat tile (Pack of 2)	2 Pks*	GS222091
Anchors for slate tile (Pack of 2)	2 Pks*	GS222090

GSSKIT1 2 Collector Bronze On-Roof	QTY	Product Code
Solar Collector (Bronze)	2	GS222773C
Connection kit flow and return	1	GS222146X
Connection Kit collector to collector	1	GS222068
2 Collector portrait rails and fixings	1	GS222741
Pump Station	1	GS222154HX
Controller	1	GS222765
Solar Fluid 10 litre	1	GS222075
Solar Fluid 20 litre	1	GS222076
Expansion Vessel 18 litre	1	GS222095
Expansion Vessel pipe connections	1	GS222074
Expansion Vessel bracket and valve	1	GS222073
Roof Anchors:		
Anchors for profile tile (Pack of 2)	3 Pks*	GS222148
Anchors for flat tile (Pack of 2)	3 Pks*	GS222091
Anchors for slate tile (Pack of 2)	3 Pks*	GS222090

GSSKIT2 3 Collector Bronze On-Roof	QTY	Product Code
Solar Collector (Bronze)	3	GS222773C
Connection kit flow and return	1	GS222146X
Connection Kit collector to collector	2	GS222068
2 Collector portrait rails and fixings	1	GS222741
1 Collector on roof extension kit	1	GS222742
Pump Station	1	GS222154HX
Controller	1	GS222765
Solar Fluid 20 litre	2	GS222076
Expansion Vessel 18 litre	1	GS222095
Expansion Vessel pipe connections	1	GS222074
Expansion Vessel bracket and valve	1	GS222073
Roof Anchors:		
Anchors for profile tile (Pack of 2)	4 Pks*	GS222148
Anchors for flat tile (Pack of 2)	4 Pks*	GS222091
Anchors for slate tile (Pack of 2)	4 Pks*	GS222090

*This is the minimum number of roof anchors required. For MCS compliant installations the number of roof anchors must be calculated using the method given in MCS012

SAHARA PORTRAIT IN-ROOF KITS

GSSKIT15 1 Collector Bronze In-Roof (TILE)	QTY	Product Code
Solar Collector (Bronze)	1	GS222773C
Connection kit flow and return	1	GS222146X
1 Collector Portrait In-Roof Kit - Tile Roof	1	GS255247 + GS255245
Pump Station	1	GS222154HX
Controller	1	GS222765
Solar Fluid 20 litre	1	GS222076
Expansion Vessel 18 litre	1	GS222095
Expansion Vessel pipe connections	1	GS222074
Expansion Vessel bracket and valve	1	GS222073

GSSKIT16 1 Collector Bronze In-Roof (SLATE)	QTY	Product Code
Solar Collector (Bronze)	1	GS222773C
Connection kit flow and return	1	GS222146X
1 Collector Portrait In-Roof Kit - Slate Roof	1	GS255249 + GS255245
Pump Station	1	GS222154HX
Controller	1	GS222765
Solar Fluid 20 litre	1	GS222076
Expansion Vessel 18 litre	1	GS222095
Expansion Vessel pipe connections	1	GS222074
Expansion Vessel bracket and valve	1	GS222073

GSSKIT3 2 Collector Bronze In-Roof (TILE)	QTY	Product Code
Solar Collector (Bronze)	2	GS222773C
Connection kit flow and return	1	GS222146X
Connection Kit collector to collector	1	GS222068
2 Collector Portrait In-Roof Kit - Tile Roof	1	GS255246 + GS255244
Pump Station	1	GS222154HX
Controller	1	GS222765
Solar Fluid 10 litre	1	GS222075
Solar Fluid 20 litre	1	GS222076
Expansion Vessel 18 litre	1	GS222095
Expansion Vessel pipe connections	1	GS222074
Expansion Vessel bracket and valve	1	GS222073

GSSKIT17 2 Collector Bronze In-Roof (SLATE)	QTY	Product Code
Solar Collector (Bronze)	2	GS222773C
Connection kit flow and return	1	GS222146X
Connection Kit collector to collector	1	GS222068
2 Collector Portrait In-Roof Kit - Slate Roof	1	GS255248 + GS255244
Pump Station	1	GS222154HX
Controller	1	GS222765
Solar Fluid 10 litre	1	GS222075
Solar Fluid 20 litre	1	GS222076
Expansion Vessel 18 litre	1	GS222095
Expansion Vessel pipe connections	1	GS222074
Expansion Vessel bracket and valve	1	GS222073

SAHARA PORTRAIT IN-ROOF KITS

GSSKIT4 3 Collector Bronze In-Roof (TILE)	QTY	Product Code
Solar Collector (Bronze)	3	GS222773C
Connection kit flow and return	1	GS222146X
Connection kit connector to connector	2	GS222068
2 Collector portrait In-Roof kit - Tile Roof	1	GS255246 + GS255244
1 Collector portrait In-Roof extension - Tile Roof	1	GS255251 + GS255245
Pump Station	1	GS222154HX
Controller	1	GS222765
Solar Fluid 20 litre	2	GS222076
Expansion Vessel 18 litre	1	GS222095
Expansion Vessel pipe connections	1	GS222074
Expansion Vessel bracket and valve	1	GS222073

GSSKIT18 3 Collector Bronze In-Roof (SLATE)	QTY	Product Code
Solar Collector (Bronze)	3	GS222773C
Connection kit flow and return	1	GS222146X
Connection kit connector to connector	2	GS222068
2 Collector portrait In-Roof kit - Slate Roof	1	GS255248 + GS255244
1 Collector portrait In-Roof ext - Slate Roof	1	GS255245 + GS255250
Pump Station	1	GS222154HX
Controller	1	GS222765
Solar Fluid 20 litre	2	GS222076
Expansion Vessel 18 litre	1	GS222095
Expansion Vessel pipe connections	1	GS222074
Expansion Vessel bracket and valve	1	GS222073

SAHARA PORTRAIT FLAT ROOF

GSSKIT5 2 Collector Bronze Flat-Roof	QTY	Product Code
Solar Collector (Bronze)	2	GS222773C
Connection kit flow and return	1	GS222146X
Connection Kit collector to collector	1	GS222068
2 Collector portrait Flat Roof rails & fixings	1	GS222741
2 Collector portrait Flat Roof Kit	1	GS222028
2 Collector portrait Flat Roof Cruciform	1	GS222169
Pump Station	1	GS222154HX
Controller	1	GS222020
Solar Fluid 10 litre	1	GS222075
Solar Fluid 20 litre	1	GS222076
Expansion Vessel 18 litre	1	GS222095
Expansion Vessel pipe connections	1	GS222074
Expansion Vessel bracket and valve	1	GS222073

For bespoke kits please contact our sales team on
+44 (0)1380 736920

ACCESSORIES

Product Code		Description
GS222139		Filling Station
GS222003		Grant Connection Kit Lead Flashing (Pack of two)
GS222008		Grant Connection Kit Acrylic Coated Lead Flashing (Pack of two)
GS222080		Insulated Pipe Clips (Pack of four)
GS600071		Connector (between two pipes) (DN16) (2pc)
GS600099		3/4 Male Connector (DN16) (2pc)
GS600194		10 metre Insulated Flex Solar Pipe (DN16)
GS600195		15 metre Insulated Flex Solar Pipe (DN16)
GS600196		25 metre Insulated Flex Solar Pipe (DN16)
GS121530		1.2 metre 15mm Foil-faced Insulation
GS122230		1.2 metre 22mm Foil-faced Insulation
GS122231		2 metre 15mm Armaflex Insulation
GS122232		2 metre 22mm Armaflex Insulation
GS222014A		2-port high temperature motorised valve 22mm
GS222015A		3-port high temperature motorised valve 22mm
GS550001		Solar fluid recovery container (including safety valve)

ACCESSORIES

Product Code		Description
GS222148		Anchors for profile tile (pack of 2)
GS222091		Anchors for flat tile (pack of 2)
GS222090		Anchors for slate tile (pack of 2)
GS222006		2x 15mm - 12mm Landscape Reducing Elbows
GS222068		Connection Kit Collector to Collector
GS222095		18 Litre Expansion Vessel
GS222072		25 Litre Expansion Vessel
GS222073		Expansion Vessel Bracket & Valve
GS222074		Expansion Vessel Pipe Connection
GS222075		10 Litre Solar Fluid (Glycol)
GS222076		20 Litre Solar Fluid (Glycol)
GS222146X		Connection Kit Flow & Return
GS222765		GSX1 Solar Controller
GS222020X		SD3X Solar controller (for east/west systems)
COMSOL3		CombiSol Thermostatic solution for linking combination boilers to solar thermal pre-heat cylinders
WINTERSOL1		WinterSol Heats complete solar cylinder when there is no solar gain

MAG ONE DUO CENTRAL HEATING FILTER

- High performance heavy duty filter
- Easy clean, easy drain design
- 12000 gauss neodymium magnet
- 28mm isolation valves with 28–22mm reducers
- 360° Installation
- Suitable for systems up to 36kW, larger systems use two in parallel circuit

Product Code	Description
VM01DUO	Vortex Mag One DUO universal 22/28mm magnetic central heating filter

Note: Mag One DUO is subject to boiler terms

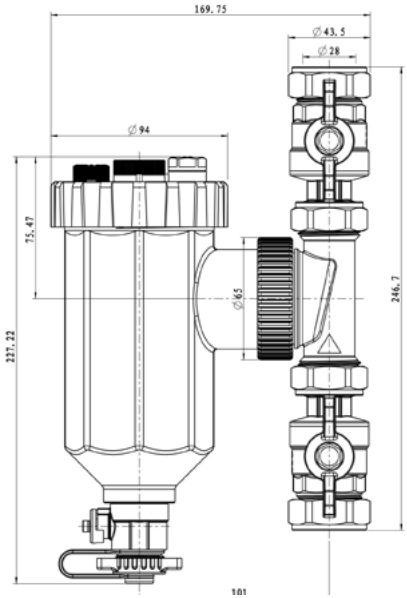

Note:
Please allow enough clearance around the Mag One DUO to ensure the isolating valves can be fully closed.

It is recommended that a clearance of at least 250mm is given to enable the magnet and filter to be removed during servicing.

Sufficient clearance must also be given to ensure that the Mag One DUO can be drained easily into a suitable container.

UFLEX UNDERFLOOR HEATING

Uflex

- 16mm pipe
- Screeded system
- Unique edge insulation
- Simple installation
- Up to 25 year guarantee (subject to full T&C's)

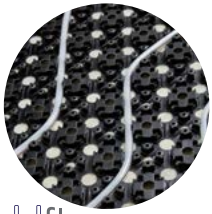

Uflex MINI

- 10mm pipe
- Fully dry in just 3 days
- No overboarding required
- Simple installation
- Up to 25 year guarantee (subject to full T&C's)

Uflex Overlay System

- 10mm or 16mm pipe
- Dry, non-screeded system
- 16mm & 20mm polystyrene boards
- Simple and quick installation
- Up to 25 year guarantee (subject to full T&C's)

Try our underfloor heating design service

UFLEX UNDERFLOOR HEATING

	Product Code		Description
PIPES	UFLEX00		Uflex UFH Pipe 16X2,0 80m
	UFLEX01		Uflex UFH Pipe 16X2,0 120m
	UFLEX02		Uflex UFH Pipe 16X2,0 240m
	UFLEX04		Uflex UFH Pipe 16X2,0 500m
	UFLEX106		120M Uflex MINI 10mm UFH pipe
	UFLEX107		240M Uflex MINI 10mm UFH pipe
	UFLEX108		480M Uflex MINI 10mm UFH pipe
	UFLEX102		Uflex 100m Pex/Al/Pex 16mm Pipe
	UFLEX101		Uflex 200m Pex/Al/Hpde 16mm Pipe
	UFLEX104		Uflex 500m Pex/Al/Pex 16mm Pipe
MANIFOLDS & PUMP SETS	UFLEX75X		Uflex Manifold SS 2X3/4 EURO
	UFLEX76X		Uflex Manifold SS 3X3/4 EURO
	UFLEX77X		Uflex Manifold SS 4X3/4 EURO
	UFLEX78X		Uflex Manifold SS 5X3/4 EURO
	UFLEX79X		Uflex Manifold SS 6X3/4 EURO
	UFLEX80X		Uflex Manifold SS 7X3/4 EURO
	UFLEX81X		Uflex Manifold SS 8X3/4 EURO
	UFLEX82X		Uflex Manifold SS 9X3/4 EURO
	UFLEX83X		Uflex Manifold SS 10X3/4 EURO
	UFLEX84X		Uflex Manifold SS 11X3/4 EURO
	UFLEX85X		Uflex Manifold SS 12X3/4 EURO
	UFLEX109		Uflex Pump/Mixer

UFLEX UNDERFLOOR HEATING

	Product Code		Description
OVERLAY BOARDS	UFLEX127		Uflex MINI overlay panel 10mm x 100mm foiled (single)
	UFLEX128		Uflex overlay panel 16mm x 150mm foiled (single)
	UFLEX129		Uflex overlay panel 16mm x 200mm foiled (single)
HEAT EMISSION PLATES	UFLEX47		Uflex heat emission plate double 400mm (pack of 28)
	UFLEX47S		Uflex heat emission double 400mm (single)
CONTROLS	UFLEX62		Uflex Neostat V2
	UFLEX63		Uflex Edge With Modbus
	UFLEX117		Uflex NeoAir V2-M Wireless Programmable Thermostat
	UFLEX118		Uflex UH8-RF V2 Wiring Centre (for NeoAir)
	UFLEX64		Uflex UH8 Wiring Center 8 Zones Underfloor
	UFLEX65		Uflex Floor/Air Sensor Underfloor
	UFLEX66		Uflex Sensor Box Underfloor
	UFLEX67		Uflex Thimble Sensor – Underfloor
	UFLEX68		Uflex Wireless Air Sensor – Underfloor
	UFLEX69		Uflex Wirless Door Contact – Underfloor
	UFLEX70		Uflex Hub – Underfloor
	UFLEX71		Uflex 230v Actuator Underfloor

UFLEX UNDERFLOOR HEATING

	Product Code		Description
ACCESSORIES	UFLEX22		Uflex Conduit 28/23 Black 50m
	UFLEX23X		Uflex Multi Edging Strip With Foil PE 50m 150x10mm
	UFLEX24		Uflex Tacker Pipe Clip Long 55mm (Pack Of 300)
	UFLEX26		Uflex Compression Adapter 1 6x2,0-G3/4"FT Euro
	UFLEX27		Uflex MINI Nubfoil 8pce, 6.2m² 1100x700x12mm
	UFLEX28		Uflex MINI Edging Strip (Self Adhesive) 20m 80x8mm
	UFLEX44		Uflex Fix Clamp Track With Glue 14-20mm C/C 50mm 1m (Pack Of 100)
	UFLEX44S		Uflex Fix Clamp Track With Glue 14-20mm C/C 50mm 1m (Single)
	UFLEX50X		Uflex Compression Repair Connector (incl. fittings for 16mm pipe)
	UFLEX51		Uflex MINI Compression Coupling
	UFLEX105X		Pex/Al/Pex Eurocone Coupling Set 16mm
	UFLEX111		Uflex Manifold Low Loss Header
	UFLEX112		Uflex Connection Angle Set
	UFLEX91		Uflex Multi Bend Support 15-16
	UFLEX116		Uflex MINI Pipe Bend Support - 10mm UFH Pipe
	UFLEX115		Eurocone Coupling for Uflex MINI pipe 10X1.3
TOOLS	UFLEX29		Uflex Multi Uncoiler Telescop
	UFLEX30		Uflex Tacker Clip Stapler Magazine 14-20mm
	UFLEX57		Uflex Multi Layer Tube Cutter (26mm)

AFINIA ALUMINIUM RADIATORS

- Horizontal & vertical options
- Highly responsive
- Ideal for low temperature systems such as ASHP's
- Up to 15 year guarantee (subject to full T&C's)

STANDARD

Code	Panels	Output W ΔT30	Output W ΔT50	Height (mm)	Width (mm)	Depth (mm)	Weight Empty (kg)	Weight Full (kg)
GALU4306KIT	6	288	552	430	480	95	6.06	7.56
GALU4308KIT	8	384	736	430	640	95	8.08	10.08
GALU43010KIT	10	480	920	430	800	95	10.10	12.60
GALU43012KIT	12	576	1104	430	960	95	12.12	15.12
GALU43014KIT	14	672	1288	430	1120	95	14.14	17.64
GALU5806KIT	6	366	744	580	480	95	8.10	10.14
GALU5808KIT	8	488	992	580	640	95	10.80	13.52
GALU58010KIT	10	610	1240	580	800	95	13.50	16.90
GALU58012KIT	12	732	1488	580	960	95	16.20	20.28
GALU58014KIT	14	854	1736	580	1120	95	18.90	23.66
GALU58015KIT	15	915	1860	580	1200	95	20.25	25.35
GALU6806KIT	6	432	852	680	480	95	9.60	11.94
GALU6808KIT	8	576	1136	680	640	95	12.80	15.92
GALU68010KIT	10	720	1420	680	800	95	16.00	19.90
GALU68012KIT	12	864	1704	680	960	95	19.20	23.88
GALU68014KIT	14	1008	1988	680	1120	95	22.40	27.86
GALU68015KIT	15	1080	2130	680	1200	95	24.00	29.85

VERTICAL

GALUV18426KIT	6	816	1626	1842	480	80	15.48	19.56
GALUV18428KIT	8	1088	2168	1842	640	80	20.64	26.08
GALUV20426KIT	6	882	1758	2042	480	80	16.86	21.36
GALUV20428KIT	8	1176	2344	2042	640	80	22.48	28.48

TechBox

All current and archived Grant installation manuals at your fingertips.

Download on the App Store

GET IT ON Google Play

This leaflet is accurate at the time of printing but as Grant UK has a policy of continual improvement it may be superseded. We reserve the right to amend specifications without prior notice. The statutory rights of the consumer are not affected.

All products manufactured under I.S. EN ISO 9001. Grant UK additionally holds ISO 14001 accreditation.

™ THE GRANT 'EZ-FIT FLUE' SYSTEM is a trade mark of Grant Engineering Ireland ULC. ®Grant Aerona³, Grant Uflex, Afinia, Grant Spira, Grant Vecta, Grant SpiraVac, Grant SpiraPod, Grant Vortex, Grant VortexBlue, Grant VortexAir, Grant EvoLink, Grant Solar, Grant Aurora, Grant Sahara, Grant CombiSOL, Grant WinterSOL, Grant MonoWave, Grant DuoWave, Grant ThermaWave, Euroflame and Multi Pass are registered trade marks of Grant Engineering Ireland ULC. The contents of this leaflet are fully protected by copyright and nothing can be reproduced without permission from Grant UK.

GRANT UK

GRANT ENGINEERING (UK) LTD
+44 (0)1380 736920
sales@grantuk.com | grantuk.com

MIX
Paper from responsible sources
FSC® C015464
www.fsc.org

UKBPG REV1025.1